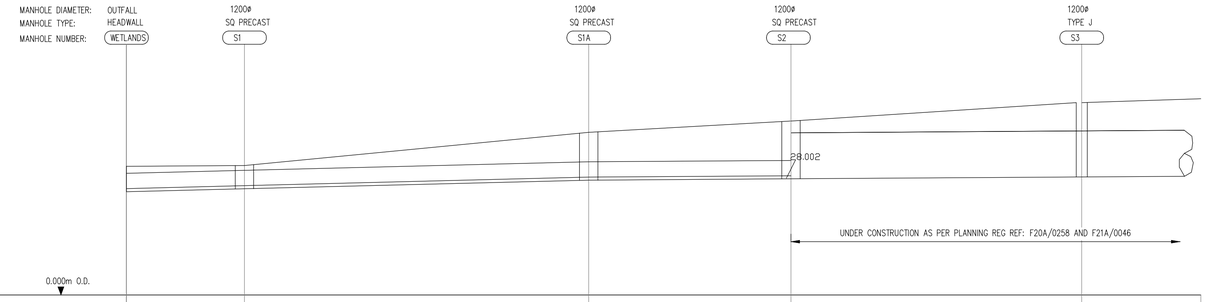

PN	10.015	10.014	10.013	10.012	
DIA (mm)	2400x650 BOX CULVERT	2400x650 BOX CULVERT	2400x650 BOX CULVERT	1500	
SLOPE (1:X)	200.7	200.0	768.2	765.5	
COVER LEVEL (m)	4.200	4.227	5.312	5.347	6.280
INVERT LEVEL (m)	3.373	3.469 / 3.469	3.750 / 3.750	3.793 / 3.793	3.655 / 3.655
LENGTH (m)	19.264	56.194	33.033	47.459	

SURFACE WATER SEWER FROM S2 TO WETALNDS (OUTFALL)
HORIZONTAL SCALE 1:500
VERTICAL SCALE 1:100

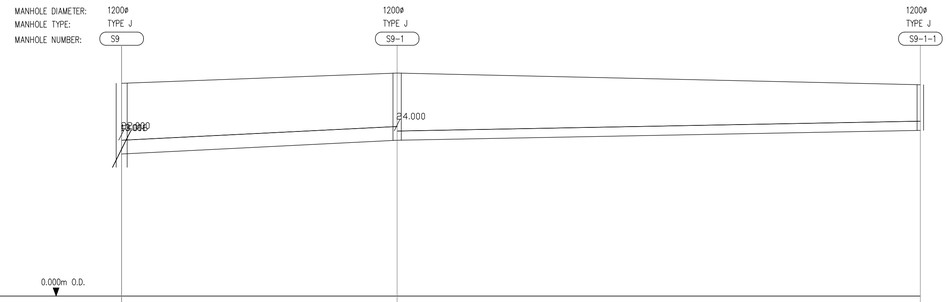

PN	23.001	23.000
DIA (mm)	450	300
SLOPE (1:X)	99.9	264.4
COVER LEVEL (m)	6.947	7.280 / 6.897
INVERT LEVEL (m)	4.637	5.087 / 5.087 / 5.410
LENGTH (m)	44.973	85.414

SURFACE WATER SEWER FROM S9-1-1 TO S9
HORIZONTAL SCALE 1:500
VERTICAL SCALE 1:100

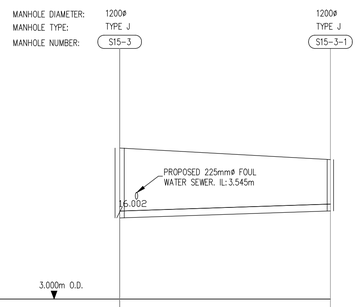

PN	17.000	
DIA (mm)	225	
SLOPE (1:X)	151.6	
COVER LEVEL (m)	7.334	7.556
INVERT LEVEL (m)	5.652	5.879
LENGTH (m)	34.409	

SURFACE WATER SEWER FROM S15-3-1 TO S15-3
HORIZONTAL SCALE 1:500
VERTICAL SCALE 1:100

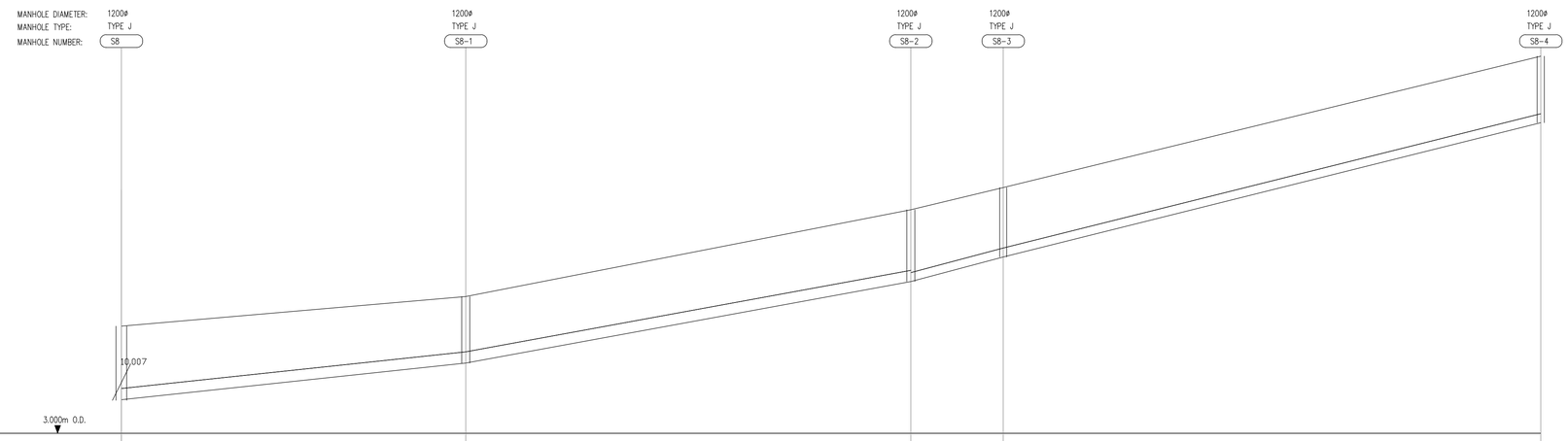

PN	25.003	25.002	25.001	25.000
DIA (mm)	375	375	300	300
SLOPE (1:X)	47.0	27.3	18.8	20.0
COVER LEVEL (m)	6.606	7.601	10.514 / 11.261	15.676
INVERT LEVEL (m)	4.134	5.365 / 5.365	8.103 / 8.103 / 8.928 / 8.928	13.442
LENGTH (m)	57.836	74.749	15.517	90.280

SURFACE WATER SEWER FROM S8-4 TO S8
HORIZONTAL SCALE 1:500
VERTICAL SCALE 1:100

R089

PLANNING DRAWING.
NOT FOR CONSTRUCTION.
ALL LEVELS GIVEN ARE
RELATIVE TO ORDNANCE DATUM.
THIS DRAWING HAS BEEN ISSUED FOR INFORMATION PURPOSES ONLY AND MUST NOT BE USED FOR CONSTRUCTION UNDER ANY CIRCUMSTANCES

NOTES
1. For setting out refer to Architect's drawings.
2. This drawing to be read in conjunction with all other Architectural and Engineering drawings and all other relevant drawings and Specifications.
3. DO NOT SCALE THIS DRAWING. Use figured dimensions only.
4. No part of this document may be reproduced or transmitted in any form or stored in any retrieval system of any nature without the written permission as copyright holder except as agreed for use on the project for which the document was originally issued.
5. Ordnance Survey Ireland Licence Number EN 0074021

Rev. No.	Date	REVISION NOTE	Drn. By	Chkd. By
P1	20.10.2020	PLANNING SUBMISSION STAGE 3	JS	OS

Architect	Henry J. Lyons
Project	GA01 Project Shoreline, Baldoyle.
Title	SURFACE WATER LONGITUDINAL SECTIONS SHEET 3 OF 3
Dwg. No.	BD-CSC-ZZ-XX-DR-C-0014

Date	Drn by	Chkd by	Aprvd by	Scale	Revision
06.04.2020	JS	PC	OS	AS SHOWN @ A1	P1

CS Consulting Group
DUBLIN | LONDON | LIMERICK
Head Office
19-22 Dame Street, Dublin 2.
T: +353 (0)1 5480863
e: info@csconsulting.ie
w: www.csconsulting.ie

NSAI Certified
Quality I.S. EN ISO 9001:2008
Environment I.S. EN ISO 14001:2004
Energy I.S. EN ISO 50001:2011
Health & Safety OHSAS 18001:2007